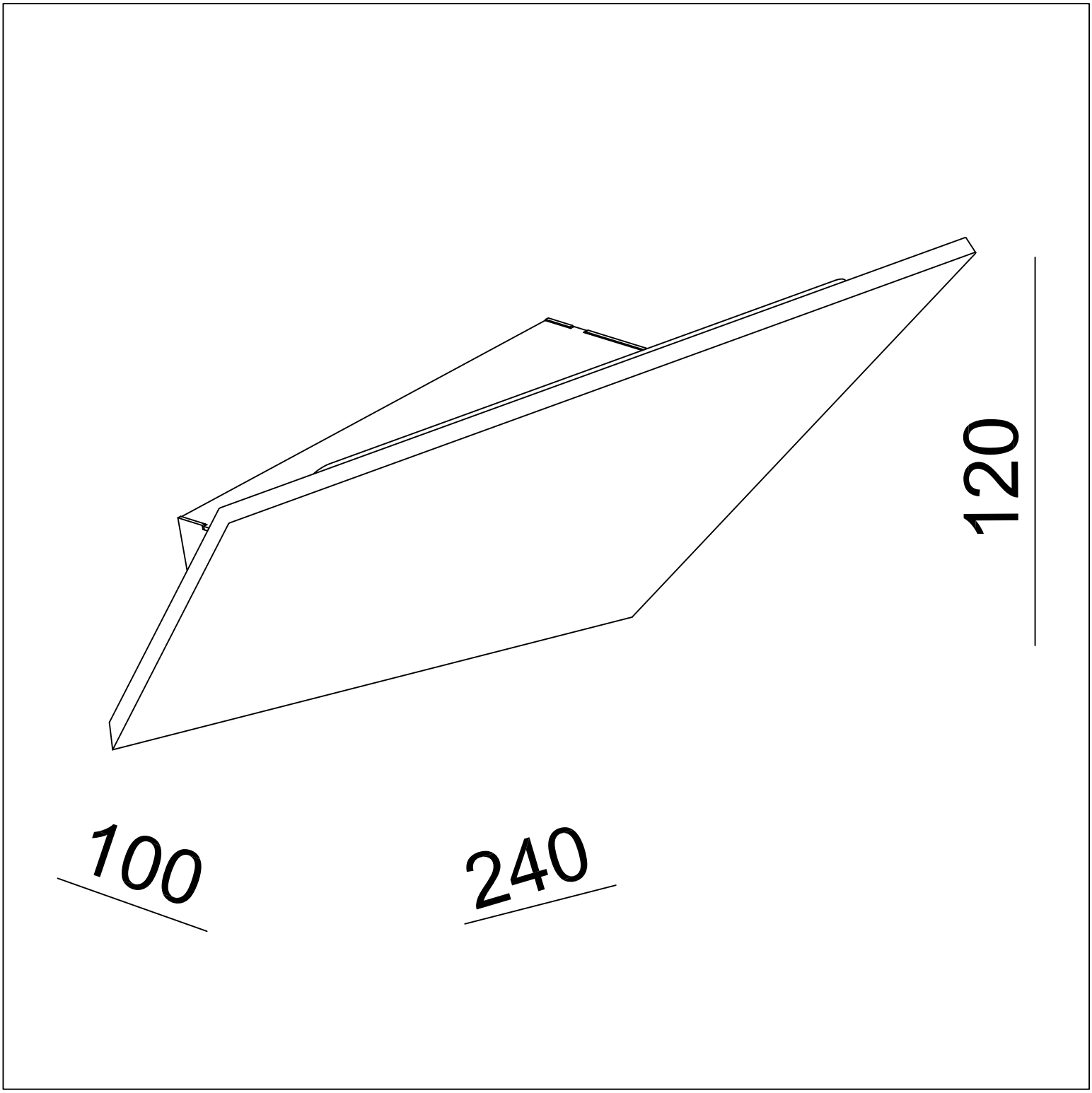

REBEI-R