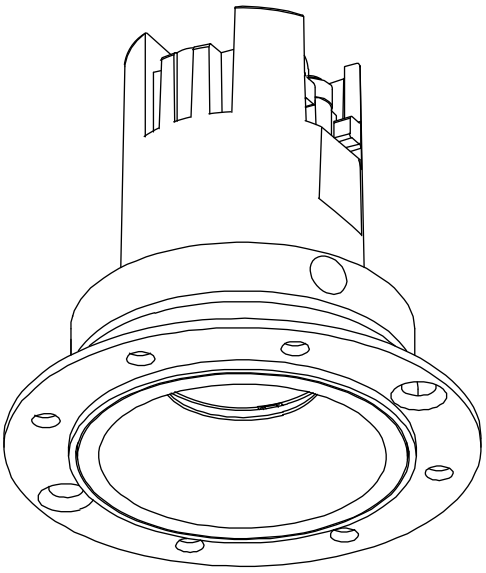

65mm

ϕ68mm

ϕ50mm

DOT XS TRIMLESS