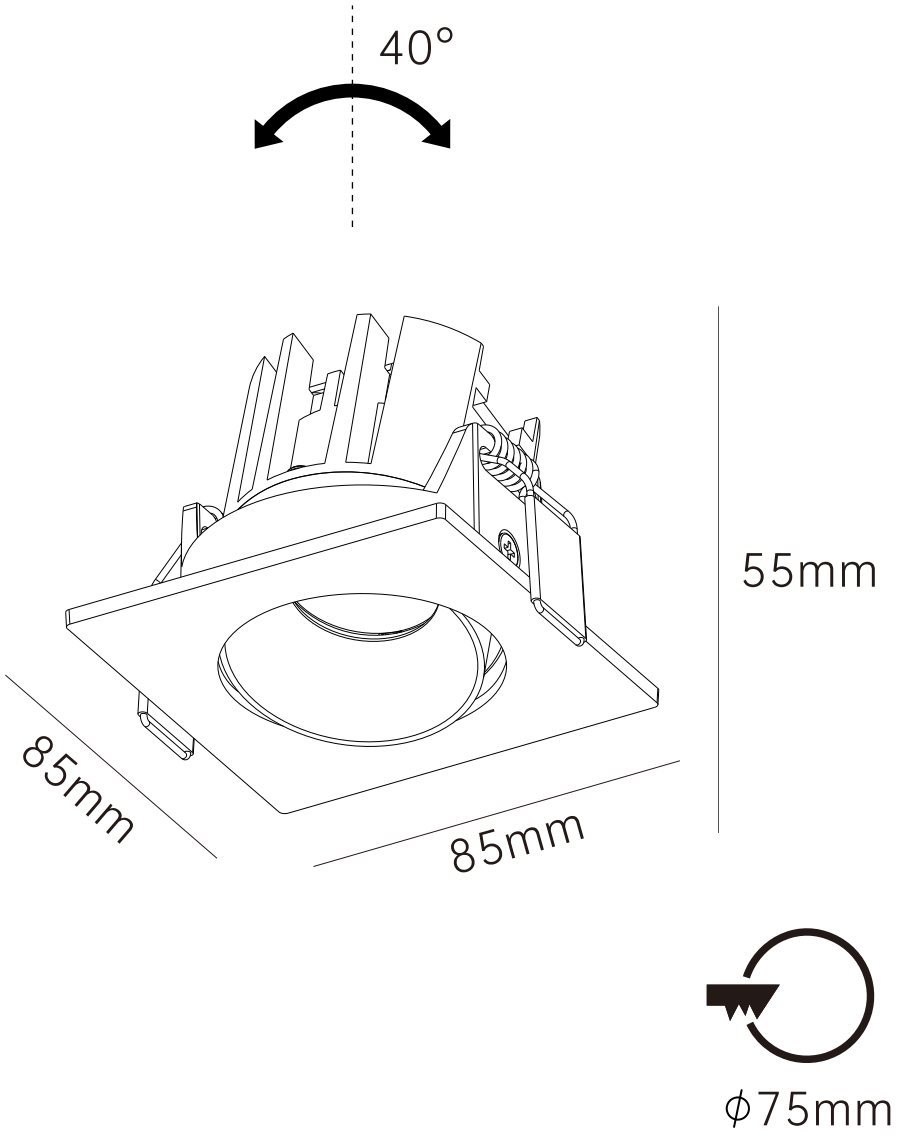

DOT M AD SQ