https://www.uni-luce.ru
+39 339 505 5880
info@uni-luce.com
Via Monselice, 26, 20832 Desio
MB, Italy

# GUIDE RASTER 4



| | |
|---|---|
| Available colors: | ○ 1550-B4<br>○ 1550-W4<br>● 1550-GR4<br>● 1550-DGR4 |
| Beam angle: | 0° |
| Цветовая температура: | 3000K 4000K 5000K 6000K |
| Мощность светильника: | 18*0.24W |
| Световой поток, lm: | 521lm |
| Материал: | die-casting powder coating aluminum, glass |
| Область применения: | Exterior |
| Место крепления: | Wall |
| Тип монтажа: | Recessed |
| Размер продукта: | L165 x 62 x 37mm |
| Напряжение, В: | 220-240V 50/60HZ |
| IP: | 67 |
| Класс защиты: | I |
| IK: | 08 |



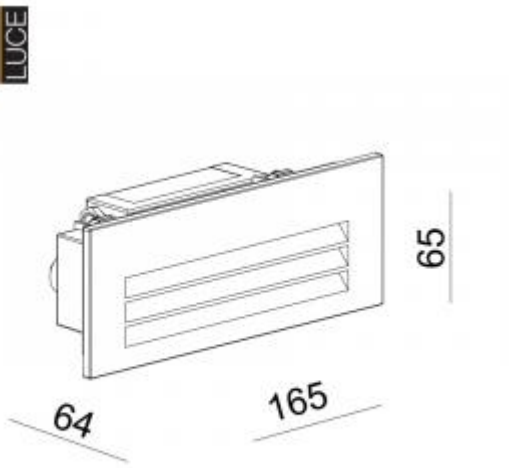

https://www.uni-luce.ru
+39 339 505 5880
info@uni-luce.com

Via Monselice, 26, 20832 Desio
MB, Italy

Our GUIDE is a very popular wall recessed fixture for guidance light in hallways and staircases, facades and pathways. Available with trim or mounted flush in the wall, perfect for usage in residential applications.The collection is enriched by the SHINE version with extrimely uniform light. In addition, PATH collection with asymetrical lens will give more lighting solutions for any project requirement