https://www.uni-luce.ru
+39 339 505 5880
info@uni-luce.com

Via Monselice, 26, 20832 Desio
MB, Italy

TALO U&D



Available colors:	592-W11 592-B11 592-GR11 592-DGR11
Beam angle:	15° 40°
LED Color:	3000K
LED power:	10,5W
System Power:	10,5W
CRI:	80
Lumen output:	200lm (6000K) 166lm (3000K)
Material:	die-casting powder coating aluminum
Location:	Exterior
Fixation:	Ceiling
Installation:	Surface
Product dimension:	56x78x79mm
Input:	24V DC
IP:	65
Class:	I
PC Cover:	PC T=3,5mm

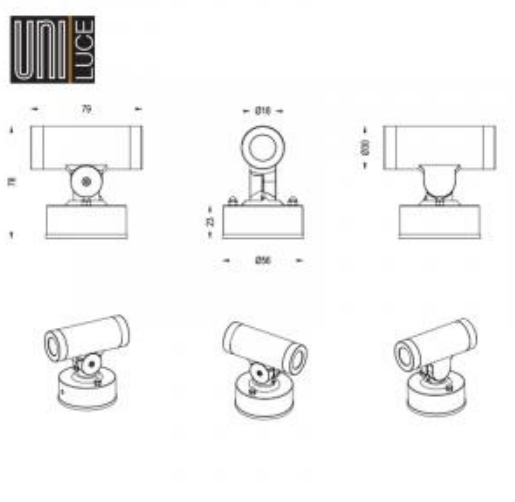

https://www.uni-luce.ru
+39 339 505 5880
info@uni-luce.com

Via Monselice, 26, 20832 Desio
MB, Italy

TALO is a tiny wall lamp with adjustable head is designed specially to create unique lighting effects for the landscrape. Best choice for the auxiliary enlighting. The TALO family is presented in 2 versions: downlight and up&down. Both lamps can appear in different colors for choice.