https://www.uni-luce.ru
+39 339 505 5880
info@uni-luce.com

Via Monselice, 26, 20832 Desio
MB, Italy

STAR MOUNTING BOX XS RO

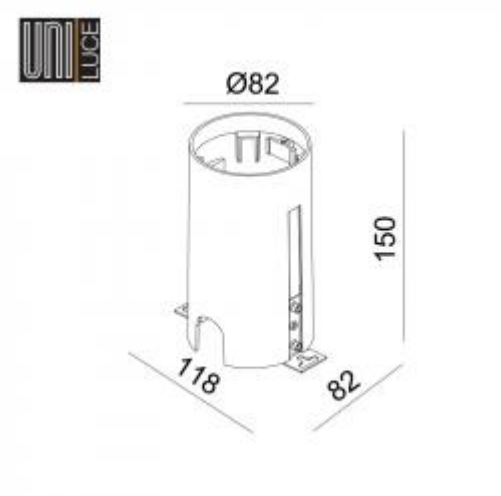

Available colors:	1087-B
Beam angle:	0°
Material:	PVC
Location:	Exterior
Fixation:	Ingroud
Product dimension:	D82 x H150mm