https://www.uni-luce.ru
+39 339 505 5880
info@uni-luce.com
Via Monselice, 26, 20832 Desio
MB, Italy

STAR-1 SS 4 SQ ADJUSTABLE TRIMLESS



| | |
|---|---|
| Available colors: | 1644-B4ADTR<br>1644-W4ADTR<br>1644-GR4ADTR<br>1644-DGR4ADTR |
| Beam angle: | 15° 21° 30° |
| LED Color: | 3000K 4000K 5000K 6000K |
| System Power: | 4W |
| Lumen output: | 378lm |
| Material: | aluminium, glass, PC |
| Location: | Exterior |
| Fixation: | Ingroud |
| Product dimension: | 76 x 76 x H106mm |
| Input: | 220-240V 50/60HZ |
| IP: | 67 |
| Class: | III |
| Structure: | Adjustable angle 30° |

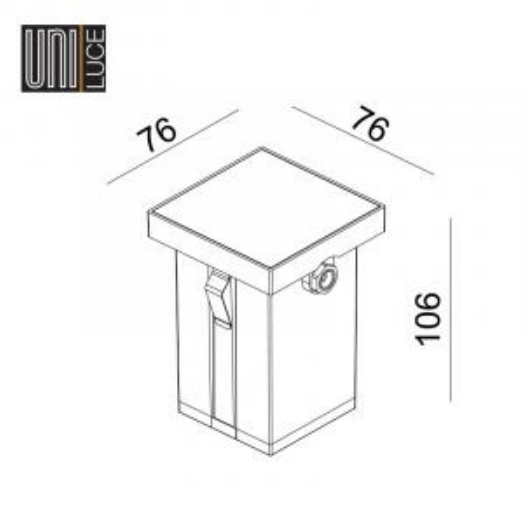

https://www.uni-luce.ru
+39 339 505 5880
info@uni-luce.com

Via Monselice, 26, 20832 Desio
MB, Italy

The DL recessed version in the STAR family has many faces: its simple cylindrical or square shape can be used as a downlight with adjustable or non adjustable light source, with frame or trimless installation. From tiny size with 4W only its extended to the 25W downlight. Thanks to its high rate IP67 and stainless steel frame, the DL STAR can be used for unlimited zones.