https://www.uni-luce.ru
+39 339 505 5880
info@uni-luce.com

Via Monselice, 26, 20832 Desio
MB, Italy

SPOT PLUS ZOOM 5 24V BOX



Available colors:	● 1618-B5-VD ○ 1618-W5-VD ● 1618-GR5-VD ● 1618-DGR5-VD
Beam angle:	18~50°
LED Color:	3000K 4000K 5000K 6000K
System Power:	5W
CRI:	90
Lumen output:	500lm
Material:	aluminium, PC, glass
Location:	Exterior
Fixation:	Garden spot
Product dimension:	D44 x 102 x H98mm
Input:	24V DC
IP:	65
Class:	III
IK:	08

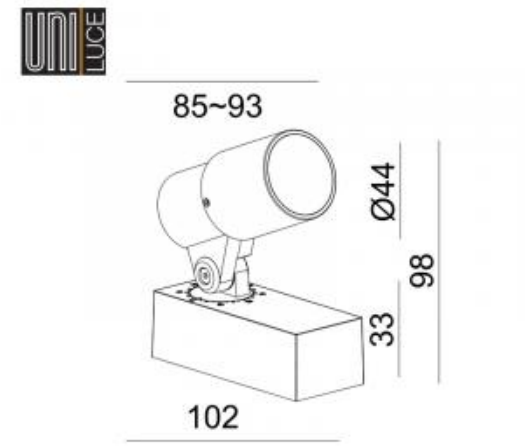

https://www.uni-luce.ru
+39 339 505 5880
info@uni-luce.com

Via Monselice, 26, 20832 Desio
MB, Italy

Flexible, subtle, elegant and powerful: these are the keywords that describe the Kix perfectly. Despite its low-profile appearance, Kix excels in light output and quality, ideal for walkway lighting or other landscape applications. Kix is easy and flexible to use thanks to the adjustable head, designed to provide optimal cooling and eliminate glare. Kix is available for installation on wall or floor, to strap around a tree or to mount in soft green areas with a pin. In addition to the more robust version of Kix, there is also a S(mall) and M(edium) version available. Kix S combines a power LED with a lens, resulting in a nice 10° light beam. All models have an IP65 rating and are available in alu grey or dark grey.