https://www.uni-luce.ru
+39 339 505 5880
info@uni-luce.com

Via Monselice, 26, 20832 Desio
MB, Italy

SKYLINE FOCUS 18



Available colors:	○ 556-WW18 ○ 556-WB18 ● 556-BB18 ◐ 556-BG18
Beam angle:	20° 36°
LED Color:	3000K
System Power:	18W 500mA
CRI:	90
Lumen output:	1885lm
Location:	Interior
Fixation:	Ceiling
Installation:	Suspended
Product dimension:	60x137x190mm
Input:	48V
IP:	20
Class:	I

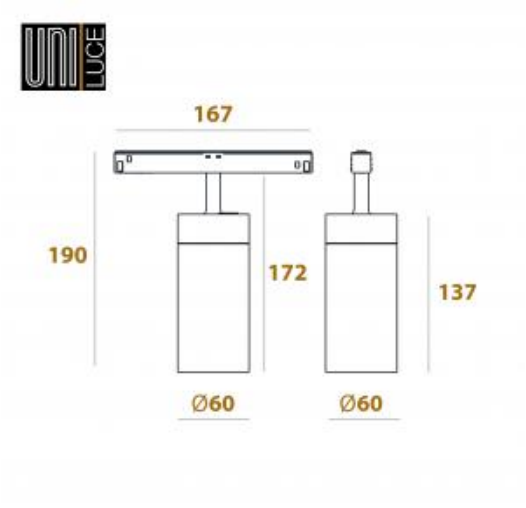

https://www.uni-luce.ru
+39 339 505 5880
info@uni-luce.com

Via Monselice, 26, 20832 Desio MB, Italy

SKYLINE is a brand new idea of running magnet systems. UNI LUCE uses the most advanced technologies and achievements in lighting and electronics. In close synergic co-operation with STUCCI Italy, we have created the most advanced system.

RECESSED TRACK SYSTEM for plywood wallboard installation. The plywood thickness can be used from 9mm to 25mm, the recessed track installation are regulated by the installation brackets. The position of lamps can be easily changed. The lamp is easily installed in any place in the track. Special fixture gives additional safety to the lamp. The SKYLINE track can be used with decorative PC cover in case of necessity. The technology is patented.

SKYLINE track presented by recessed, surfaced mounted and pendant versions. Thanks to connection elements (corner connectors) SKYLINE track configuration can be changed as needed, going from the ceiling to the wall and back. The track is connected to the power line through the power supply (supplied separately). Power supply voltage is 48V. The maximum power of the track cannot exceed 350W, power supply is needed to be connected every 5m. During recessed track installation the power supply should be hidden in a specially prepared place. The longest wire length should not exceed 3m.

The driver box for surface mounted track is developed specially to solve the installation problem of the driver. The driver box looks as a part of the track installed on the ceiling. Maximum power of the driver inside the driver box is 200W.