https://www.uni-luce.ru
+39 339 505 5880
info@uni-luce.com

Via Monselice, 26, 20832 Desio
MB, Italy

ROLLER S+



Available colors:	○ 373-WW8 ● 373-BB8 ○ 373-WB8 ◐ 373-BG8
Beam angle:	24° 48°
LED Color:	2700K 3000K 4000K
LED power:	6,9W
System Power:	1x7,9W 450mA
CRI:	80
Lumen output:	1037lm
Location:	Interior
Fixation:	Ceiling
Installation:	Recessed
Product dimension:	83x83x103mm
Cut hole size:	68x68mm
Input:	220-240V 50\60Hz
IP:	20
Class:	I
DIM Option:	ON/OFF DALI TRIAC DTW

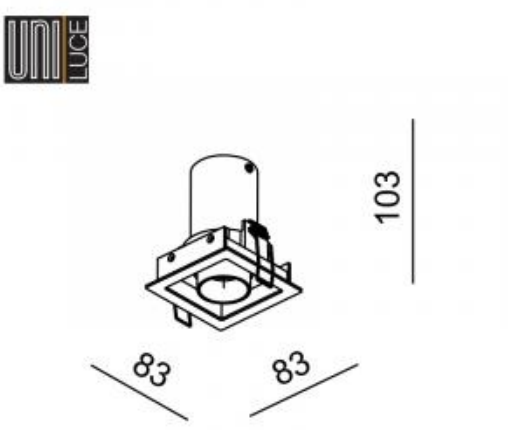

https://www.uni-luce.ru
+39 339 505 5880
info@uni-luce.com

Via Monselice, 26, 20832 Desio
MB, Italy

The ROLLER is a lighting system, with the full flexibility of installation. A black minimalistic box could contain one or two heads. These ROLLER modules can remain encapsulated in the ceiling, or emerge in its entirety and be tilted 90° while rotate 355°, allowing focused illumination in one swift move. The black background inside the cove creates an illusion of unendingness around the light spots, enforcing the fully integrated architectural lighting concept. A range of light refining accessories are available to guarantee optimal optic performance and maximum eye comfort.