https://www.uni-luce.ru
+39 339 505 5880
info@uni-luce.com

Via Monselice, 26, 20832 Desio
MB, Italy

ROLLER L



Available colors:	○ 633-WW18 ● 633-BB18 ○ 633-WB18 ◐ 633-BG18
Beam angle:	18° 32°
LED Color:	2700K 3000K 4000K
LED power:	16,3W
System Power:	18W 500mA
CRI:	80
Lumen output:	2395lm
Location:	Interior
Fixation:	Ceiling
Installation:	Recessed
Product dimension:	145x145x135mm
Cut hole size:	132x132mm
Input:	220-240V 50\60Hz
IP:	20
Class:	I
DIM Option:	ON/OFF DALI TRIAC DTW

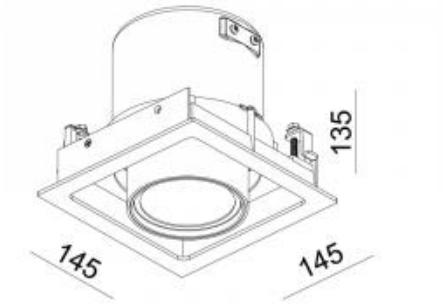
135
145
145

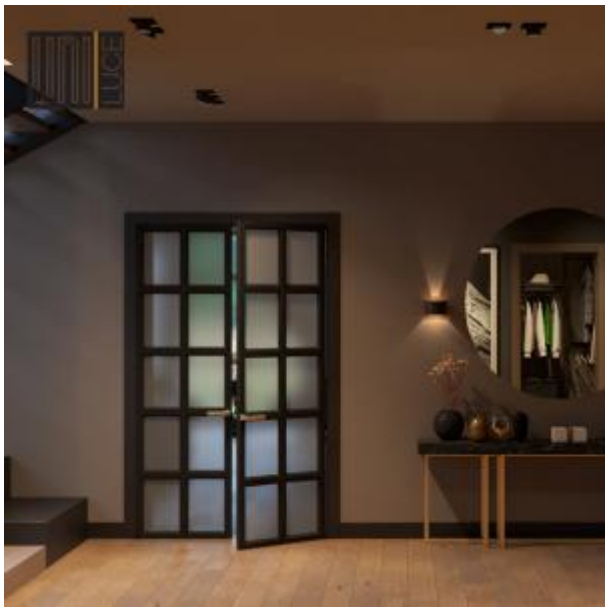

https://www.uni-luce.ru
+39 339 505 5880
info@uni-luce.com

Via Monselice, 26, 20832 Desio
MB, Italy

The ROLLER is a lighting system, with the full flexibility of installation. A black minimalistic box could contain one or two heads. These ROLLER modules can remain encapsulated in the ceiling, or emerge in its entirety and be tilted 90° while rotate 355°, allowing focused illumination in one swift move. The black background inside the cove creates an illusion of unendingness around the light spots, enforcing the fully integrated architectural lighting concept. A range of light refining accessories are available to guarantee optimal optic performance and maximum eye comfort.