https://www.uni-luce.ru
+39 339 505 5880
info@uni-luce.com

Via Monselice, 26, 20832 Desio
MB, Italy

RAY SQ LONG



Available colors:	○ 452-W8SQLO ● 452-B8SQLO ● 452-GR8SQLO
Beam angle:	23° 28° 38°
LED Color:	3000K
System Power:	8W
CRI:	80
Lumen output:	695lm
Location:	Interior
Fixation:	Ceiling
Installation:	Surface
Product dimension:	63x63x52mm
Input:	AC 220-240V 50\60Hz
IP:	20
Class:	III

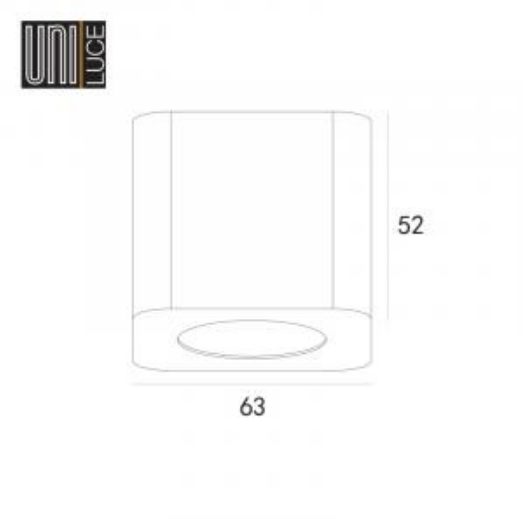

https://www.uni-luce.ru
+39 339 505 5880
info@uni-luce.com

Via Monselice, 26, 20832 Desio
MB, Italy

The straightforward, miniature contemporary design on RAY lets you install it in every application. Thanks to IP54, some lamps from RAY collection can be used for both indoor and outdoor use. Round and square forms are available for choice.