https://www.uni-luce.ru
+39 339 505 5880
info@uni-luce.com

Via Monselice, 26, 20832 Desio
MB, Italy

PRISMA 4



Available colors:	○ 465-W4 ● 465-B4 ● 465-GR4 ● 465-DGR4
Beam angle:	3° 17° 21° 32° 55°
LED Color:	3000K
System Power:	4W
CRI:	80
Lumen output:	374lm
Location:	Exterior
Fixation:	Ceiling
Installation:	Surface
Product dimension:	58x58x68mm
Input:	220-240V 50\60Hz
IP:	65
Class:	I

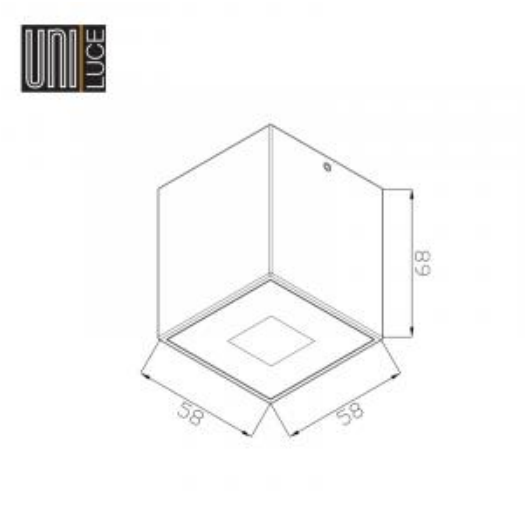

https://www.uni-luce.ru
+39 339 505 5880
info@uni-luce.com

Via Monselice, 26, 20832 Desio
MB, Italy

Surface mounted fixture is equipped by the glass cover. PRISMA can be installed in the areas where additional protecion is required. PRISMA comes in 3 dimensions: 4W, 8W and 18W. Super comfort lens provides soft uniform light effect.