https://www.uni-luce.ru
+39 339 505 5880
info@uni-luce.com
Via Monselice, 26, 20832 Desio
MB, Italy

PERLA RO ASYMMETRICAL



Available colors:	○ 398-SS2
Beam angle:	0° 0°
LED Color:	3000K 6000K
System Power:	1x2W
Lumen output:	130lm(6000K) 110lm(3000K)
Material:	die-casting powder coating aluminum
Location:	Exterior
Fixation:	Ingroud
Product dimension:	40x43x58mm
Input:	220-240V 50\60Hz 24V DC
IP:	67
Class:	II
Glass:	tempered frosted glass, T=7mm
Front cover:	SUS316 stainless steel

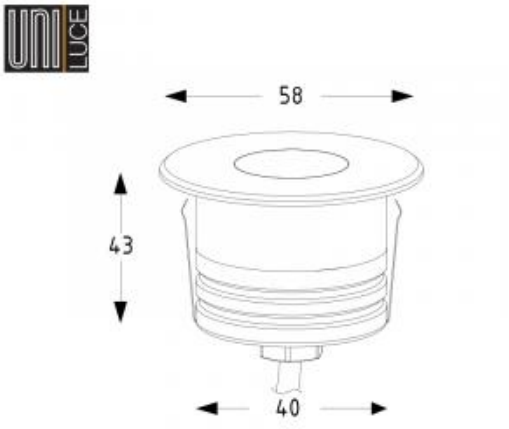



https://www.uni-luce.ru
+39 339 505 5880
info@uni-luce.com

Via Monselice, 26, 20832 Desio
MB, Italy

PERLA collection of inground lighting is the best example of minimalism and functionality. Thanks to its shorten size of aluminium housing, PERLA can be installed in the places with limited space. PERLA collection is the best choice for wooden floors application. Symmetrical & asymetrical versions are available for choice.