https://www.uni-luce.ru
+39 339 505 5880
info@uni-luce.com

Via Monselice, 26, 20832 Desio
MB, Italy

ORIENT

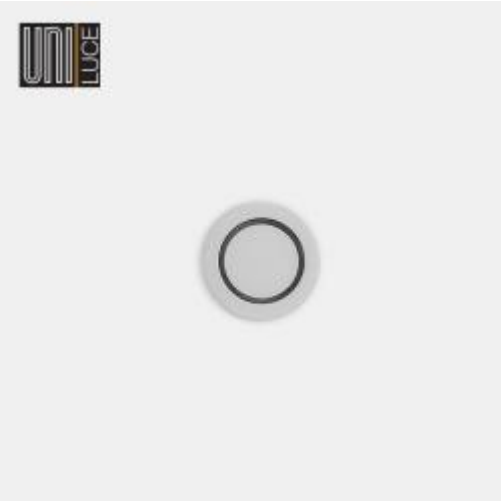

Available colors:	○ 601-W3 ● 601-B3
Beam angle:	L°
LED Color:	2700K 3000K 4000K
LED power:	2W
System Power:	2,5W
CRI:	90
Lumen output:	220lm
Material:	aluminium
Location:	Interior
Fixation:	Wall
Installation:	Recessed
Product dimension:	49x38mm
Cut hole size:	45mm
Input:	220-240V 50\60Hz
IP:	65
Class:	I



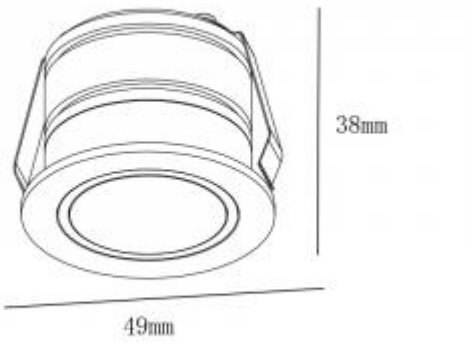

https://www.uni-luce.ru
+39 339 505 5880
info@uni-luce.com

Via Monselice, 26, 20832 Desio
MB, Italy

Miniature step light ORIENT is designed for a decorative auxiliary light for the halls, corridoors, steps. Thanks to its IP65, the ORIENT can be used for both indoor and outdoor applications.