https://www.uni-luce.ru
+39 339 505 5880
info@uni-luce.com

Via Monselice, 26, 20832 Desio
MB, Italy

ORA S+



Available colors:	○ 548-W11 ● 548-B11 ● 548-G11
Beam angle:	29° 38°
LED Color:	2700K 3000K 4000K
LED power:	9,2W
System Power:	11W, 300mA
CRI:	80
Lumen output:	1077lm
Material:	aluminium
Location:	Interior
Fixation:	Ceiling
Installation:	Recessed
Product dimension:	63x63x80mm
Cut hole size:	55x55mm
Input:	220-240V 50\60Hz
IP:	54
Class:	I
DIM Option:	ON/OFF DALI TRIAC DTW

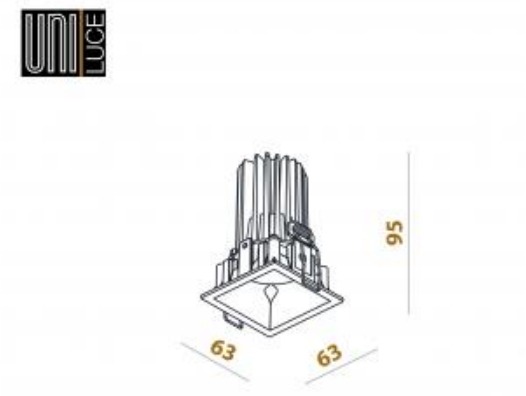

https://www.uni-luce.ru
+39 339 505 5880
info@uni-luce.com

Via Monselice, 26, 20832 Desio
MB, Italy

ORA is more than just a downlight, it’s a real product family. Thanks to IP54 rate, ORA can be used for both indoor and outdoor application. Both trim and trimless series are available for choice