https://www.uni-luce.ru
+39 339 505 5880
info@uni-luce.com

Via Monselice, 26, 20832 Desio
MB, Italy

NESSO S



Available colors:	○ 589-W11 ● 589-B11 ● 589-GR11 ● 589-DGR11
Beam angle:	15° 40°
LED Color:	3000K
System Power:	11W
CRI:	80
Lumen output:	896lm (6000K) 850lm (3000K)
Material:	extruded aluminium alloy
Location:	Exterior
Fixation:	Ceiling
Installation:	Surface
Product dimension:	130x114mm
Input:	220-240V 50\60Hz
IP:	65
Class:	I

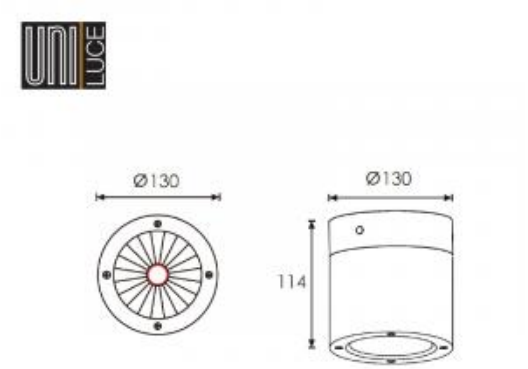



https://www.uni-luce.ru
+39 339 505 5880
info@uni-luce.com

Via Monselice, 26, 20832 Desio
MB, Italy

Surface mounted cylindrical shaped down light with IP65 is the best choice for the outdoor ceiling mounting.
While the deeper recessed LED chip reduces the glare, the choice in colour creates possibilities for playful and attractive lighting solutions. The NESSO family is presented by 2 dimensions: NESSO S and NESSO M.