https://www.uni-luce.ru
+39 339 505 5880
info@uni-luce.com

Via Monselice, 26, 20832 Desio
MB, Italy

MICRO SHAR SUSPENDED



Available colors:	◯ 493-W5VD
Beam angle:	0°
LED Color:	3000K
System Power:	4,5W
CRI:	80
Lumen output:	754lm
Location:	Interior
Fixation:	Ceiling
Installation:	Suspended
Product dimension:	100mm 150x7x23mm
Input:	42V
IP:	20
Class:	III

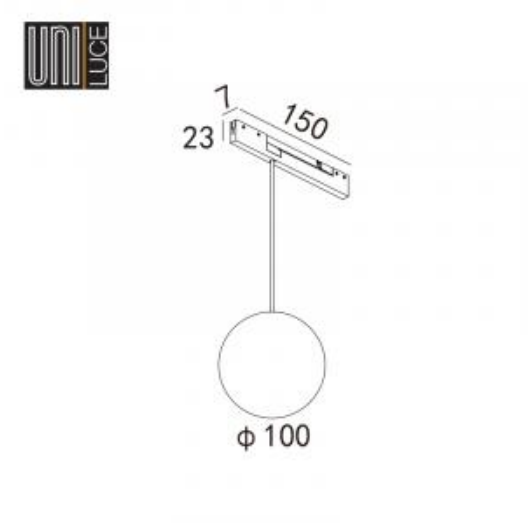

https://www.uni-luce.ru
+39 339 505 5880
info@uni-luce.com

Via Monselice, 26, 20832 Desio
MB, Italy

MICRO product family is the best example of minimalism and tecnology. Functionality and flexibility are the key words to describe MICRO family. Super slim track recessed in the ceiling and wall has flexible construction, due to L-shape accessories, the MICRO track can create a lot of different pattens in the room. Low voltage (42V) makes the track use safe. MICRO product family is extended by recessed, surface mounted, and pendand lamps. In addition, MICRO family is equipped with 1-10V DIM function. Maximum power of the power supply must not exceed 126W. MICRO lamps series has become a great addition to the essential range of MICRO track. MICRO lamps collection is presented by reccesssed and surface mounted liners, suspended and wall lamps. The wide range of the MICRO product family is united by one essential features: MICRO range is the most miniature creature in the UNI LUCE collection.