https://www.uni-luce.ru
+39 339 505 5880
info@uni-luce.com
Via Monselice, 26, 20832 Desio
MB, Italy

MARS FL M 14 24V



Available colors:	1561-B14-VD 1561-W14-VD 1561-GR14-VD 1561-DGR14-VD
Beam angle:	6° 14° 27° 36°
LED Color:	3000K 4000K 5000K 6000K
System Power:	14W
CRI:	90
Lumen output:	1164lm
Material:	aluminium, glass, PC
Location:	Exterior
Fixation:	Garden spot
Product dimension:	D130 x H150mm
Input:	24V DC
IP:	65
Class:	III
Structure:	Rotation: 30°, Spot Adjust: 0~90°
IK:	08

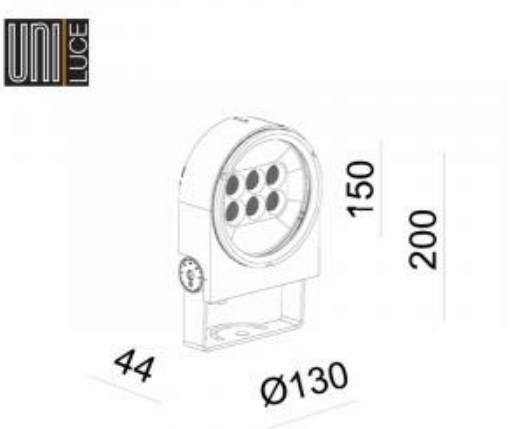

https://www.uni-luce.ru
+39 339 505 5880
info@uni-luce.com

Via Monselice, 26, 20832 Desio
MB, Italy

MARS, the luminaire head is to be installed on a pin, on a strap or on a simplified bracket. In this way, MARS can easily be transformed to install in between the green, around a tree, a pole or any other surface. To facilitate the installation of multiple MARS luminaires, a degree scale is integrated on the hinge, perfect for precise aiming and a proper repetitive light effect. MARS is presented in RGBW or mono color light.