https://www.uni-luce.ru
+39 339 505 5880
info@uni-luce.com

Via Monselice, 26, 20832 Desio
MB, Italy

LINER GRID 1600



Available colors:	○ 449-W44 ● 449-B44 ● 449-GR44
Beam angle:	94°
LED Color:	2700K 3000K 4000K
LED power:	40W
System Power:	44W
CRI:	80
Lumen output:	2628lm
Location:	Interior
Fixation:	Ceiling
Installation:	Surface
Product dimension:	1623x25x48mm
Input:	120-277V 50\60Hz
IP:	20
Class:	I

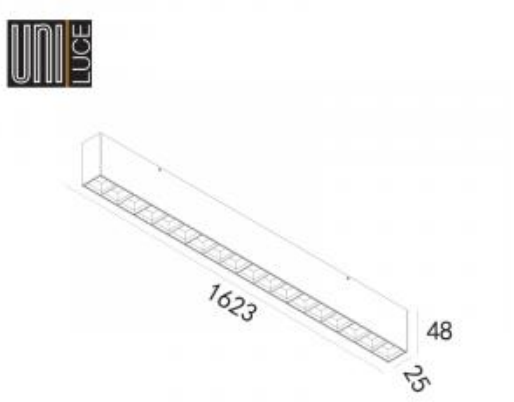



https://www.uni-luce.ru
+39 339 505 5880
info@uni-luce.com

Via Monselice, 26, 20832 Desio
MB, Italy

LINER is a very versatile profile family with a focus on LED. This made-to-measure profile can be finished with an opal or LED spots. Special addition is adjustable version, both opal and spots version. Thanks to different modifications LINER is suitable for many applications, including private ambiences and public areas.