https://www.uni-luce.ru
+39 339 505 5880
info@uni-luce.com

Via Monselice, 26, 20832 Desio
MB, Italy

ILLUSION 10



Available colors:	● 364-BB20 ○ 364-WB20
Beam angle:	30° 46°
LED Color:	2700K 3000K 4000K
LED power:	10x1W
System Power:	10x2W 700mA
CRI:	90
Lumen output:	2500lm
Location:	Interior
Fixation:	Ceiling
Installation:	Recessed
Product dimension:	257x44x52mm
Cut hole size:	250x36mm
Input:	220-240V 50\60Hz
IP:	20
Class:	III
DIM Option:	ON/OFF DALI TRIAC DTW

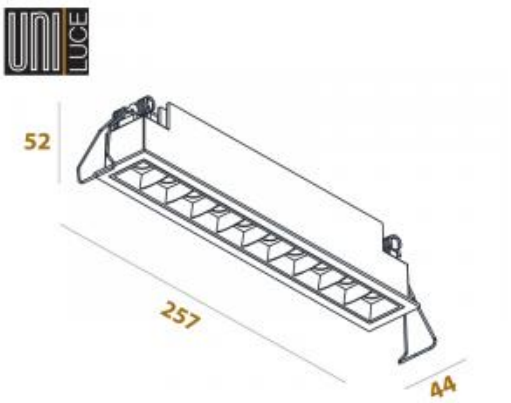

https://www.uni-luce.ru
+39 339 505 5880
info@uni-luce.com

Via Monselice, 26, 20832 Desio
MB, Italy

ILLUSION: The range includes an adjustable version with trim and a trimless solution. The ILLUSION WALL WASH is ideal for instance to emphasize an artwork on the wall. The specific design of the trimless luminaire grants the opportunity to install it either completely into the ceiling or semi-recessed, to evoque more expression into the room. Different colors are available for choice.