https://www.uni-luce.ru
+39 339 505 5880
info@uni-luce.com

Via Monselice, 26, 20832 Desio
MB, Italy

GUIDE MOUNTING BOX S

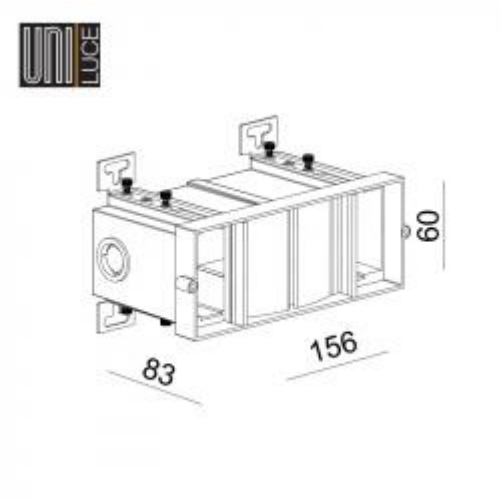

Available colors:	1083-B
Beam angle:	0°
Material:	PVC
Location:	Exterior
Fixation:	Wall
Installation:	Recessed
Product dimension:	L156 x W83 x H60mm