https://www.uni-luce.ru
+39 339 505 5880
info@uni-luce.com

Via Monselice, 26, 20832 Desio
MB, Italy

GUIDE A 3



Available colors:	1545-B3 1545-W3 1545-GR3 1545-DGR3
Beam angle:	0°
LED Color:	3000K 4000K 5000K
System Power:	12X0.29W
Lumen output:	397lm
Material:	die-casting powder coating aluminum, glass
Location:	Exterior
Fixation:	Wall
Installation:	Recessed
Product dimension:	L165 x 62 x 37mm
Input:	220-240V 50/60HZ
IP:	67
Class:	I
IK:	08



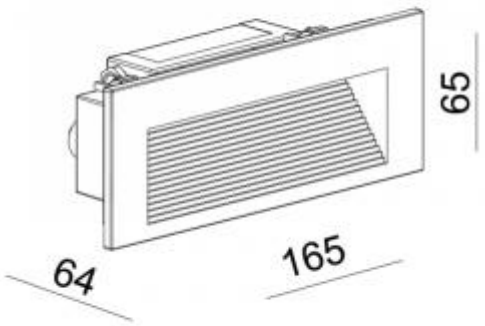
65
165
64

https://www.uni-luce.ru
+39 339 505 5880
info@uni-luce.com

Via Monselice, 26, 20832 Desio
MB, Italy

Our GUIDE is a very popular wall recessed fixture for guidance light in hallways and staircases, facades and pathways. Available with trim or mounted flush in the wall, perfect for usage in residential applications.The collection is enriched by the SHINE version with extrimely uniform light. In addition, PATH collection with asymetrical lens will give more lighting solutions for any project requirement.