https://www.uni-luce.ru
+39 339 505 5880
info@uni-luce.com
Via Monselice, 26, 20832 Desio
MB, Italy

FLAT M RO 24V



Available colors:	477-BSS2RO-VD
Beam angle:	0°
LED Color:	3000K 6000K
System Power:	2,4W
Lumen output:	20lm (6000K) 13lm (3000K)
Material:	die-casting powder coating aluminum
Location:	Exterior
Fixation:	Ingroud
Product dimension:	173x38mm
Input:	24V DC
IP:	67
Class:	II
Glass:	tempered frosted glass, T=8mm
Front cover:	SUS316 stainless steel

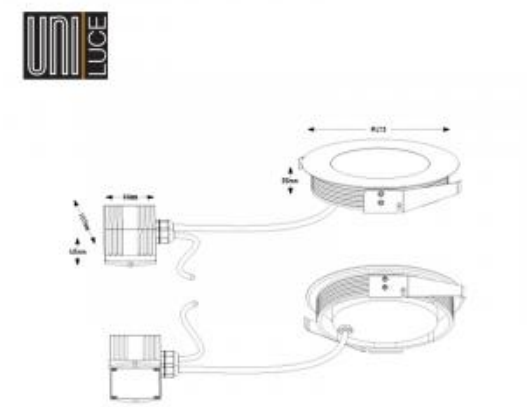

https://www.uni-luce.ru
+39 339 505 5880
info@uni-luce.com

Via Monselice, 26, 20832 Desio
MB, Italy

UNI LUCE inground collection is extended by the new elegant idea FLAT. FLAT provides soft uniform light. Thanks to its ultra thin housing, FLAT is becoming the best choice for the projects with limited installation space. Two sizes are available for choice. Both included round and square options.