https://www.uni-luce.ru
+39 339 505 5880
info@uni-luce.com
Via Monselice, 26, 20832 Desio
MB, Italy

FINLED



Available colors:	392-B4 392-GR4 392-DGR4
Beam angle:	0° 0°
LED Color:	3000K 6000K
System Power:	20x0,2W
Lumen output:	103lm(6000K) 97lm (3000K)
Material:	die-casting powder coating aluminum
Location:	Exterior
Fixation:	Wall
Installation:	Recessed
Product dimension:	160x100x100mm
Input:	220-240V 50\60Hz 24V DC
IP:	65
Class:	II
Front cover:	die-casting powder coating aluminum
LED:	SMD3030 type LED

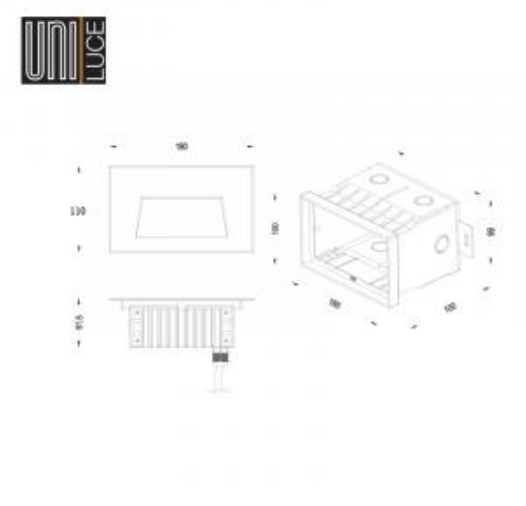

https://www.uni-luce.ru
+39 339 505 5880
info@uni-luce.com

Via Monselice, 26, 20832 Desio
MB, Italy

As a wall recessed luminaire, FINLED is perfect as a guidance light. Recommended for auxiliary lighting for car parking, halls and path areas.