https://www.uni-luce.ru
+39 339 505 5880
info@uni-luce.com
Via Monselice, 26, 20832 Desio
MB, Italy

EVENT SS



Available colors:	○ 541-W6 ● 541-B6 ● 541-G7
Beam angle:	32° 45°
LED Color:	2700K 3000K 4000K
LED power:	4,7W
System Power:	6,5W 500mA
CRI:	80
Lumen output:	576lm
Material:	aluminium
Location:	Interior
Fixation:	Ceiling
Installation:	Recessed
Product dimension:	35x70mm
Cut hole size:	30mm
Input:	220-240V 50\60Hz
IP:	54
Class:	I
DIM Option:	ON/OFF DALI TRIAC DTW

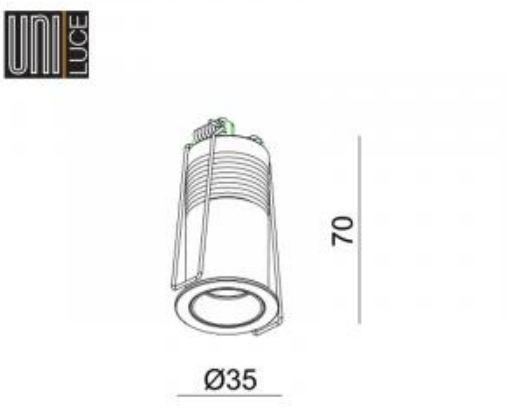

https://www.uni-luce.ru
+39 339 505 5880
info@uni-luce.com

Via Monselice, 26, 20832 Desio
MB, Italy

This stunning collection of downlights is specially designed to answer all possible designers' request. Miniature size, IP54, best anti glare effect, different colors and finishings for choice, this is what makes the EVENT collection so popular. Trim and trimless versions are available for choice.