https://www.uni-luce.ru
+39 339 505 5880
info@uni-luce.com

Via Monselice, 26, 20832 Desio
MB, Italy

CRYSTAL RO SYMMETRICAL



Available colors:	◯ 411-SS2-VD
Beam angle:	30°
LED Color:	3000K 6000K
System Power:	1x2W
Lumen output:	102lm(6000K) 94lm(3000K)
Material:	SUS316 stainless steel
Location:	Exterior
Fixation:	Underwater
Product dimension:	D44,5 x H84mm
Input:	24V DC
IP:	68
Class:	II
Glass:	tempered glass, T=4mm
Front cover:	SUS316 stainless steel
Gasket:	EPDM

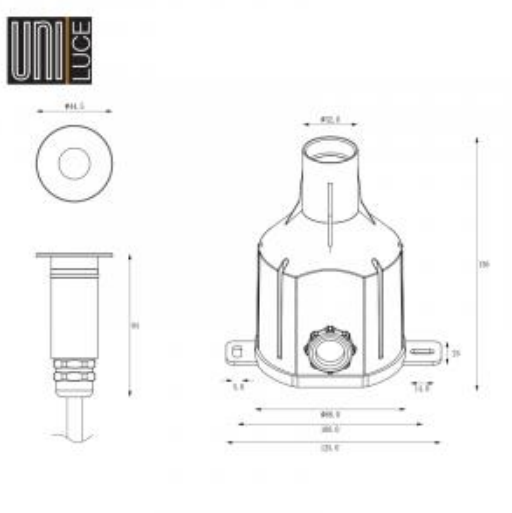

https://www.uni-luce.ru
+39 339 505 5880
info@uni-luce.com

Via Monselice, 26, 20832 Desio
MB, Italy

CRISTAL is a great example of miniature recessed underwater lighting. Triac, PWM, 1-10V and DALI are available for choice.