https://www.uni-luce.ru
+39 339 505 5880
info@uni-luce.com

Via Monselice, 26, 20832 Desio
MB, Italy

BOBO-2 LENS ADJUSTABLE



Available colors:	○ 529-W11AD ● 529-B11AD ○ 529-WB11AD
Beam angle:	20° 30° 42°
LED Color:	2700K 3000K 4000K
LED power:	2x8,9W
System Power:	2x11W 500mA
CRI:	90
Lumen output:	2x1135 lm
Location:	Interior
Fixation:	Celling
Installation:	Surface
Product dimension:	D120mm x 81mm
Input:	220-240V 50/60HZ
IP:	20
Class:	I
DIM Option:	ON/OFF TRIAC DTW

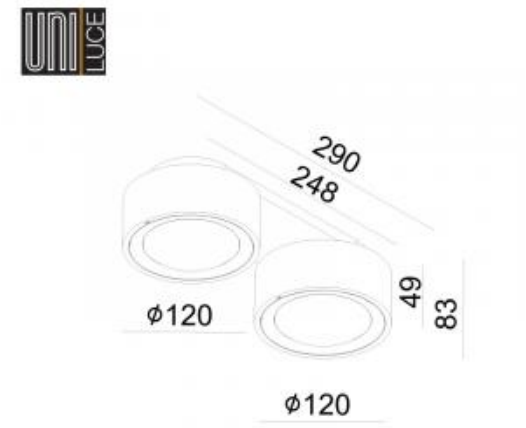

https://www.uni-luce.ru
+39 339 505 5880
info@uni-luce.com

Via Monselice, 26, 20832 Desio
MB, Italy

The round shape in this BOBO family has two faces: its simple cylindrical shape can be used as a downlight, as long as up&down version can give additional decorative effect to the room. Front ring is fixed by magnet element, that makes it easy to install any optic accessorie once necessary.