https://www.uni-luce.ru
+39 339 505 5880
info@uni-luce.com

Via Monselice, 26, 20832 Desio
MB, Italy

BIDI 16 U&D



Available colors:	○ 398-W16 ● 398-B16 ● 398-GR16
Beam angle:	0°
LED Color:	3000K
System Power:	16W 700mA
CRI:	80
Material:	die-casting powder coated aluminium
Location:	Exterior
Fixation:	Wall
Installation:	Surface
Product dimension:	108x176x45mm
Input:	100-240V 50\60Hz
IP:	65
Class:	I
Light Window:	glass

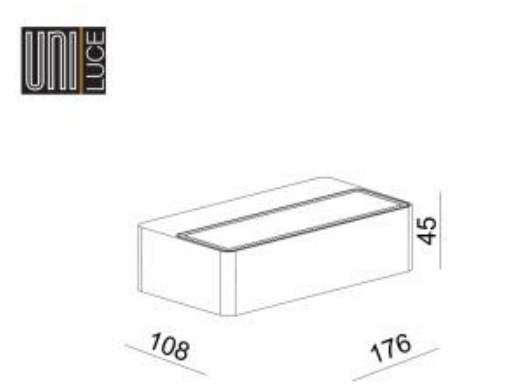



https://www.uni-luce.ru
+39 339 505 5880
info@uni-luce.com

Via Monselice, 26, 20832 Desio
MB, Italy

A medium sized rectangular lighting fixture, delivering a pleasant up and downward light effect on your wall. As a wall surface mounted unit, the BIDI is perfect for both residential use or for hospitality usage in hotels and restaurants. Despite its IP65 rating for outdoor use, this unit also feels very comfortable when used indoors.