https://www.uni-luce.ru
+39 339 505 5880
info@uni-luce.com

Via Monselice, 26, 20832 Desio
MB, Italy

ASTRO 60 U&D



Available colors:	○ 405-W60 ● 405-B60 ● 405-GR60 ● 405-DGR60
Beam angle:	15° 24° 38° 60°
LED Color:	3000K 4000K 5000K
LED power:	2 x 30W
System Power:	64W
CRI:	90
Lumen output:	3400lmx2(6000K) 3177lmx2(3000K)
Material:	extruded aluminum alloy #6063
Location:	Exterior
Fixation:	Wall
Installation:	Surface
Product dimension:	160x221,7x400mm
Input:	220-240V 50\60Hz
IP:	65
Class:	II
IK:	10

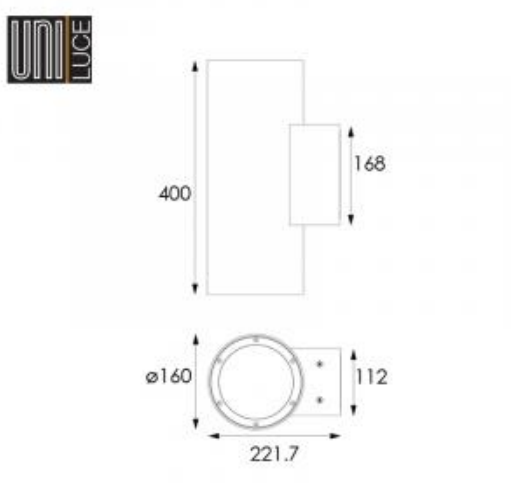

https://www.uni-luce.ru
+39 339 505 5880
info@uni-luce.com

Via Monselice, 26, 20832 Desio
MB, Italy

The ASTRO comes in many different models, but they all have one thing in common: its quite small tubular shape is what defines this range of lighting fixtures. Whether in single use or accompanied by another cylinder to make it directional, this one is always a beauty. ASTRO comes in many playful finishing colours. To complete the range, up and down versions are available for choice.