https://www.uni-luce.ru
+39 339 505 5880
info@uni-luce.com

Via Monselice, 26, 20832 Desio
MB, Italy

WING R



Available colors:	○ 358-W8 ● 358-B8 ○ 358-CH8 ● 358-G8
Beam angle:	L°
LED Color:	2700K 3000K 4000K
LED power:	6,5W
System Power:	8W 350mA
CRI:	90
Lumen output:	790lm
Location:	Interior
Fixation:	Wall
Installation:	Surface
Product dimension:	100x240x120mm
Input:	100-240V 50\60Hz
IP:	40
Class:	I
DIM Option:	ON/OFF TRIAC

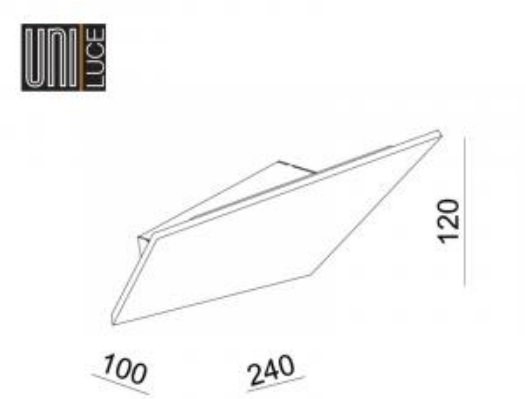

https://www.uni-luce.ru
+39 339 505 5880
info@uni-luce.com

Via Monselice, 26, 20832 Desio MB, Italy

WING is a wall-mounted architectural eye-catcher. It is hard to describe this light fitting in either words or images. Call it the three dimensional development of a cube on paper: from reality to abstraction and back. A cube on paper consists of two overlapping squares. The fitting is available in two versions each forming the mirror image of the other. Add an extra dimension with installations that play with a downlighter and an uplighter. Thanks to IP40, WING can be used in the areas where water proof is required.