https://www.uni-luce.ru
+39 339 505 5880
info@uni-luce.com

Via Monselice, 26, 20832 Desio
MB, Italy

UNO ON SQUARE



Available colors:	○ 360-W9SQ ● 360-B9SQ ● 360-GR9SQ ● 360-G9SQ ○ 360-W9SQ
Beam angle:	35°
LED Color:	2700K 3000K 4000K 5000K
LED power:	8,9W
System Power:	9,5W
Lumen output:	1173m
Location:	Interior
Fixation:	Celling
Installation:	Surface
Product dimension:	93x93x114mm
Input:	220-240V 50/60HZ
IP:	20
Class:	III
CRI::	90
DIM options:	ON/OFF TRIAC

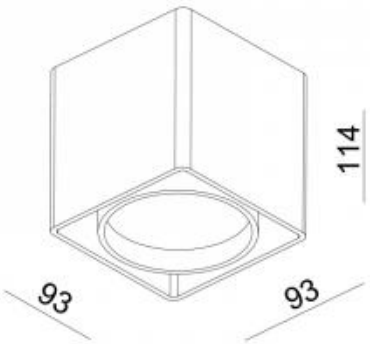
114
93
93



https://www.uni-luce.ru
+39 339 505 5880
info@uni-luce.com

Via Monselice, 26, 20832 Desio
MB, Italy

The classical design of ROUND surface mounted luminaire with simple and elegant appearance can be used for many applications, be it private or public areas. Many colors are available for choice. Thanks to soft DIM function, ROUND can be used to create special romantic atmosphere with its candle effect.