https://www.uni-luce.ru
+39 339 505 5880
info@uni-luce.com

Via Monselice, 26, 20832 Desio
MB, Italy

SPY M+



Available colors:	○ 431-WW30 ● 431-BB30 ○ 431-WB30 ○ 431-WB30 ◐ 431-BG30
Beam angle:	18° 50° 32°
LED Color:	2700K 3000K 4000K
LED power:	27,5W
System Power:	30W 800mA
CRI:	90
Lumen output:	3810lm
Location:	Interior
Fixation:	Ceiling
Installation:	Surface
Product dimension:	86x154mm
Input:	100-240V 50\60Hz
IP:	20
Class:	I
DIM Option:	ON/OFF TRIAC DTW

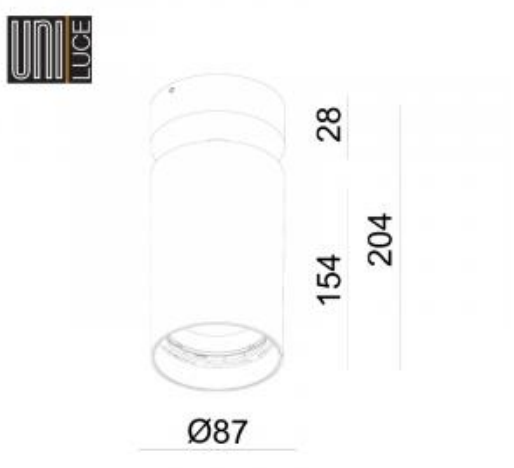

https://www.uni-luce.ru
+39 339 505 5880
info@uni-luce.com

Via Monselice, 26, 20832 Desio
MB, Italy

SPY, a new member of the UNI LUCE family, add refinement, finesse and color to the range. They are characterized by catching the eye design, but also serves as storage for technical parts inside the luminaire. SPY collection is available with DIM to warm function. Many accessories are available for choice, to create special light effect.