https://www.uni-luce.ru
+39 339 505 5880
info@uni-luce.com

Via Monselice, 26, 20832 Desio
MB, Italy

RIO SQ SOFT



Available colors:	○ 540-FG3SQ ● 540-B3SQ
Beam angle:	0° 0°
LED Color:	2700K 3000K 4000K
LED power:	1,5W
System Power:	2,5W
CRI:	90
Lumen output:	157lm
Material:	aluminium, glass
Location:	Interior
Fixation:	Wall
Installation:	Recessed
Product dimension:	65x75x75mm
Input:	220-240V 50\60Hz
IP:	20
Class:	I



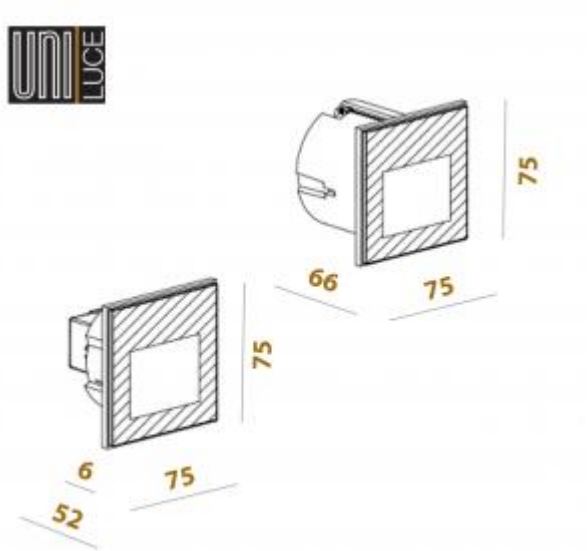

https://www.uni-luce.ru
+39 339 505 5880
info@uni-luce.com

Via Monselice, 26, 20832 Desio
MB, Italy

RIO collection has become very popular thanks to the special light effect that this lamp provides in the room. The RIO collection comes in four main designs. Recommended for halls, corridors, stairs.