https://www.uni-luce.ru
+39 339 505 5880
info@uni-luce.com

Via Monselice, 26, 20832 Desio
MB, Italy

IMAGE M SQ TRIMLESS



Available colors:	○ 441-W15SQTR ● 441-B15SQTR
Beam angle:	9° 23°
LED Color:	2700K 3000K 4000K
LED power:	13W
System Power:	15W 350mA
CRI:	80
Lumen output:	1425lm
Location:	Interior
Fixation:	Ceiling
Installation:	Recessed
Product dimension:	159x96x92mm
Cut hole size:	104x97mm
Input:	220-240V 50\60Hz
IP:	20
Class:	III
DIM Option:	ON/OFF DALI TRIAC

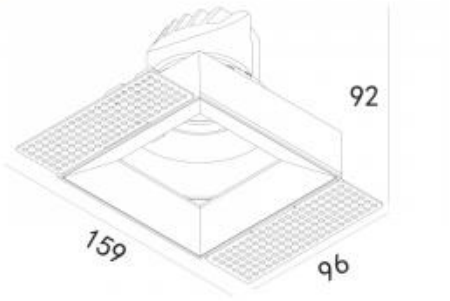

https://www.uni-luce.ru
+39 339 505 5880
info@uni-luce.com

Via Monselice, 26, 20832 Desio
MB, Italy

IMAGE is a unique collection in the UNI LUCE product portfolio. But one thing all members of the IMAGE family have in common is that the light source is deeply recessed into the luminaire, resulting in a high level of visual comfort. This range can be with or without trim, round or square, single or double, with different colour finishes. In addition, models with narrow beam angle, gives special atmosphere to the room, emphasizing separate objects in the room.