https://www.uni-luce.ru
+39 339 505 5880
info@uni-luce.com
Via Monselice, 26, 20832 Desio MB, Italy

GUIDE RASTER 6 LONG



Available colors:	1551-B6 1551-W6 1551-GR6 1551-DGR6
Beam angle:	0°
LED Color:	3000K 4000K 5000K 6000K
System Power:	18X0.35W
Lumen output:	662lm
Material:	die-casting powder coating aluminum, glass
Location:	Exterior
Fixation:	Wall
Installation:	Recessed
Product dimension:	L265 x 65 x 44mm
Input:	220-240V 50/60HZ
IP:	67
Class:	I
IK:	08



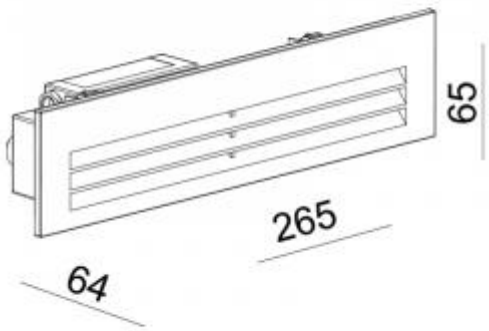
65
265
64