https://www.uni-luce.ru
+39 339 505 5880
info@uni-luce.com

Via Monselice, 26, 20832 Desio
MB, Italy

GUIDE A 3 24V



Available colors:	1545-B3-VD 1545-W3-VD 1545-GR3-VD 1545-DGR3-VD
Beam angle:	0°
LED Color:	3000K 4000K 5000K 6000K
System Power:	12X0.34W
Lumen output:	397lm
Material:	die-casting powder coating aluminum, glass
Location:	Exterior
Fixation:	Wall
Installation:	Recessed
Product dimension:	L165 x 62 x 37mm
Input:	24V DC
IP:	67
Class:	I
IK:	08



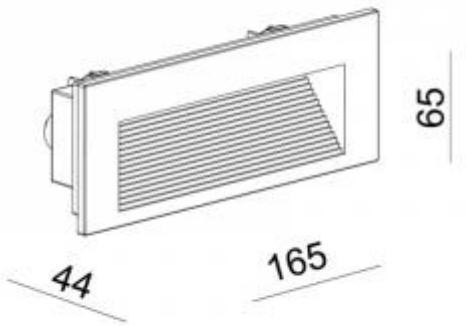
65
44
165