https://www.uni-luce.ru
+39 339 505 5880
info@uni-luce.com

Via Monselice, 26, 20832 Desio
MB, Italy

GLANCE M



Available colors:	○ 452-W11 ● 452-B11
Beam angle:	22° 45° 22°
LED Color:	2700K 3000K 4000K
LED power:	9W
System Power:	11W 250mA
CRI:	90
Lumen output:	1060lm
Location:	Interior
Fixation:	Ceiling
Installation:	Surface
Product dimension:	52x97x100mm
Input:	220-240V 50\60Hz
IP:	20
Class:	I
DIM Option:	ON/OFF TRIAC

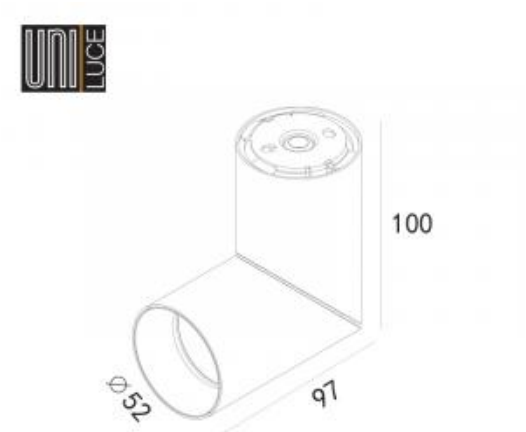

https://www.uni-luce.ru
+39 339 505 5880
info@uni-luce.com

Via Monselice, 26, 20832 Desio
MB, Italy

GLANCE is one of the most unexpected member of UNI LUCE collection: rotating function makes it possible to focus the lighting in accordance with project requirements. Two sizes are available for choice.