https://www.uni-luce.ru
+39 339 505 5880
info@uni-luce.com

Via Monselice, 26, 20832 Desio
MB, Italy

EVENT L+ TRIMLESS



Available colors:	○ 541-W28TR ● 541-B28TR ● 541-G28TR
Beam angle:	30° 45°
LED Color:	2700K 3000K 4000K
LED power:	25,7W
System Power:	27,5W 350mA
CRI:	80
Lumen output:	2501lm
Material:	aluminium
Location:	Interior
Fixation:	Ceiling
Installation:	Recessed
Product dimension:	114x118mm
Cut hole size:	133mm
Input:	220-240V 50\60Hz
IP:	54
Class:	I
DIM Option:	ON/OFF DALI TRIAC DTW

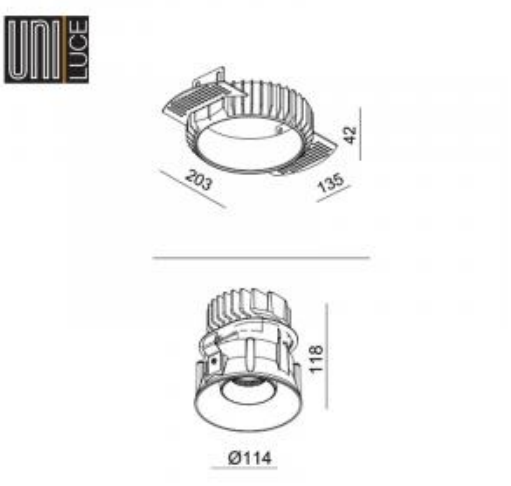

https://www.uni-luce.ru
+39 339 505 5880
info@uni-luce.com

Via Monselice, 26, 20832 Desio
MB, Italy

This stunning collection of downlights is specially designed to answer all possible designers' request. Miniature size, IP54, best anti glare effect, different colors and finishings for choice, this is what makes the EVENT collection so popular. Trim and trimless versions are available for choice.