https://www.uni-luce.ru
+39 339 505 5880
info@uni-luce.com
Via Monselice, 26, 20832 Desio
MB, Italy

EVENT ADJUSTABLE L TRIMLESS



Available colors:	○ 1759-BB12AD-TR ○ 1759-WW12AD-TR ○ 1759-WB12AD-TR ○ 1759-WG12AD-TR ◐ 1759-BG12AD-TR ◐ 1759-BB12AD-TR
Beam angle:	20°
LED Color:	2700K 3000K 4000K
LED power:	12.2W
System Power:	13W
CRI:	90
Lumen output:	1356lm
Material:	aluminium
Location:	Interior
Fixation:	Celling
Installation:	Recessed
Product dimension:	D114×H118mm
Cut hole size:	D133mm
Input:	220-240V 50/60HZ
IP:	20
Class:	I
DIM Option:	ON/OFF DALI TRIAC DTW
Structure:	Adjustable angle 20°, rotation: 360°

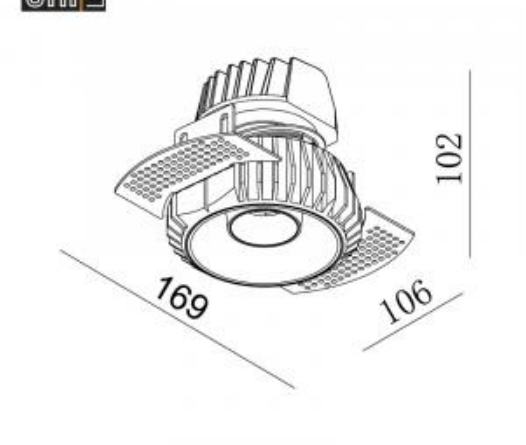
102
169
106