https://www.uni-luce.ru
+39 339 505 5880
info@uni-luce.com

Via Monselice, 26, 20832 Desio
MB, Italy

DOT 4



Available colors:	○ 513-W4-VD ● 513-B4-VD
Beam angle:	9° 12° 24°
LED Color:	3000K
System Power:	2x2W
Lumen output:	257lm
Location:	Interior
Product dimension:	22x22,5mm
IP:	20
Class:	III
Voltage:	48V

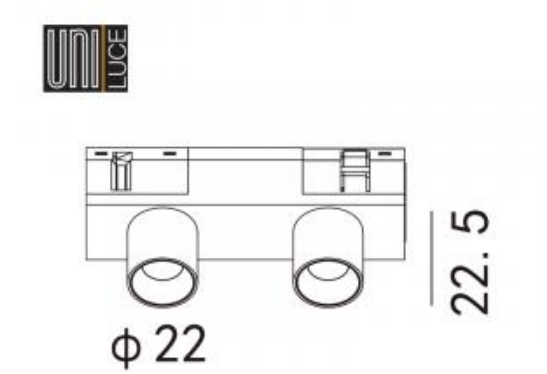

https://www.uni-luce.ru
+39 339 505 5880
info@uni-luce.com

Via Monselice, 26, 20832 Desio
MB, Italy

The NIX system is a compact low voltage (48V) track system in which LED lighting fixtures are mounted by click mechanism. It has no limitations in terms of length and allows create configurations from the ceiling to the walls.Tracks can be built-in, laid-on, or suspended. Thanks to special installation brackets NIX built-in track can be installed after all necessary mentainance. NIX ON Track have different installation methods including recessed, surface mounting and suspending. In the NIX lighting system, you can easily change the number of lighting fixtures and their arrangements, creating new lighting patterns in the room. Thanks to great veriety of lamps, NIX system can match any interior style. A special click mechanism ensures reliable fixation of the lighting fixtures in the track. Brightness adjustment, management via the DALI protocol, or 1-10V.