https://www.uni-luce.ru
+39 339 505 5880
info@uni-luce.com

Via Monselice, 26, 20832 Desio
MB, Italy

DIRO L RO



Available colors:	○ 425-W25RO ● 425-B25RO
Beam angle:	24° 34° 40°
LED Color:	3000K
LED power:	23W
System Power:	25W
CRI:	80
Lumen output:	2540lm
Location:	Interior
Fixation:	Ceiling
Installation:	Recessed
Product dimension:	124x113mm
Cut hole size:	114mm
Input:	220-240V 50\60Hz
IP:	20
Class:	III

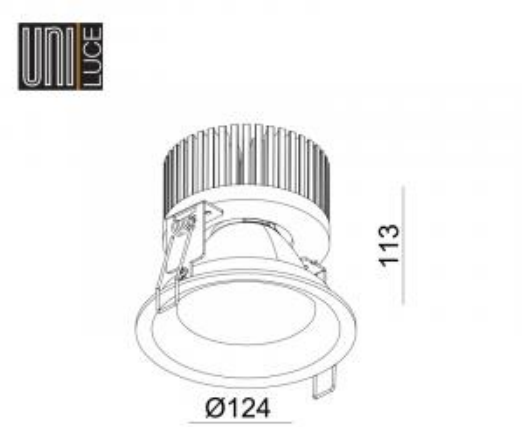

https://www.uni-luce.ru
+39 339 505 5880
info@uni-luce.com

Via Monselice, 26, 20832 Desio
MB, Italy

The DIRO collection is more than one product, it is a family which offers a solution for many lighting demands, from residential to hotel, restaurant to retail and much more. In line with this philosophy, DIRO comes in single and double fixtures, round or square, orientable or fixed, in multiple finishing colours.