https://www.uni-luce.ru
+39 339 505 5880
info@uni-luce.com

Via Monselice, 26, 20832 Desio
MB, Italy

AUREOLE L



Available colors:	○ 432-WW30 ● 432-BB30 ◐ 432-BG30 ○ 432-CR30
Beam angle:	24° 47°
LED Color:	2700K 3000K 4000K
LED power:	27,6W
System Power:	30W 800mA
CRI:	90
Lumen output:	3810lm
Location:	Interior
Fixation:	Ceiling
Installation:	Surface
Product dimension:	125x128mm
Input:	220-240V 50\60Hz
IP:	20
Class:	I
DIM Option:	ON/OFF TRIAC DTW

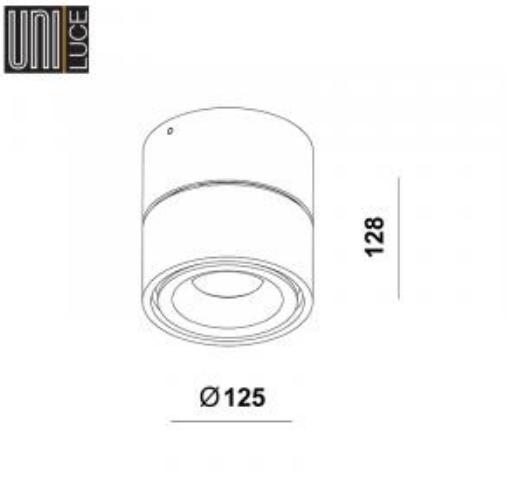

https://www.uni-luce.ru
+39 339 505 5880
info@uni-luce.com

Via Monselice, 26, 20832 Desio
MB, Italy

AUREOLE is one of the most remarkable families in the UNI LUCE collection, destined to become a longstanding classic. AUREOLE is equipped with rotating function, characterized by an asymmetrical hinge joint, combining extreme rotation and tilting abilities, all in one swift whirling motion. Three dimensions are available for choice.