https://www.uni-luce.ru
+39 339 505 5880
info@uni-luce.com

Via Monselice, 26, 20832 Desio
MB, Italy

ARIES SOFT TRIMLESS



Available colors:	○ 534-FG10TR
Beam angle:	15° 21° 25° 33°
LED Color:	2700K 3000K 4000K
LED power:	8,4W
System Power:	9,7W
CRI:	80
Lumen output:	651lm
Location:	Interior
Fixation:	Ceiling
Installation:	Recessed
Product dimension:	68x97mm
Cut hole size:	39mm
Input:	220-240V 50\60Hz
IP:	20
Class:	III
DIM Option:	ON/OFF DALI TRIAC 1-10V

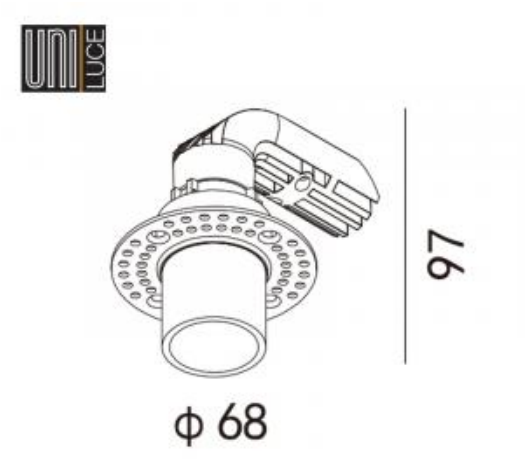

https://www.uni-luce.ru
+39 339 505 5880
info@uni-luce.com

Via Monselice, 26, 20832 Desio
MB, Italy

Minimalist modern design of ARIES has become very popular among designers and architects. Small size of the lamp provides great lighting effect. The unique shape of radiator makes it possible to install the lamp in the ceiling with limited space. In addition, different colors of the lamp are available for choice. The collection is presented by trim and trimless versions